The Bridge As-Built Plans and corresponding BrDR Models are provided for example only and may not represent the modeling techniques used by your agency.

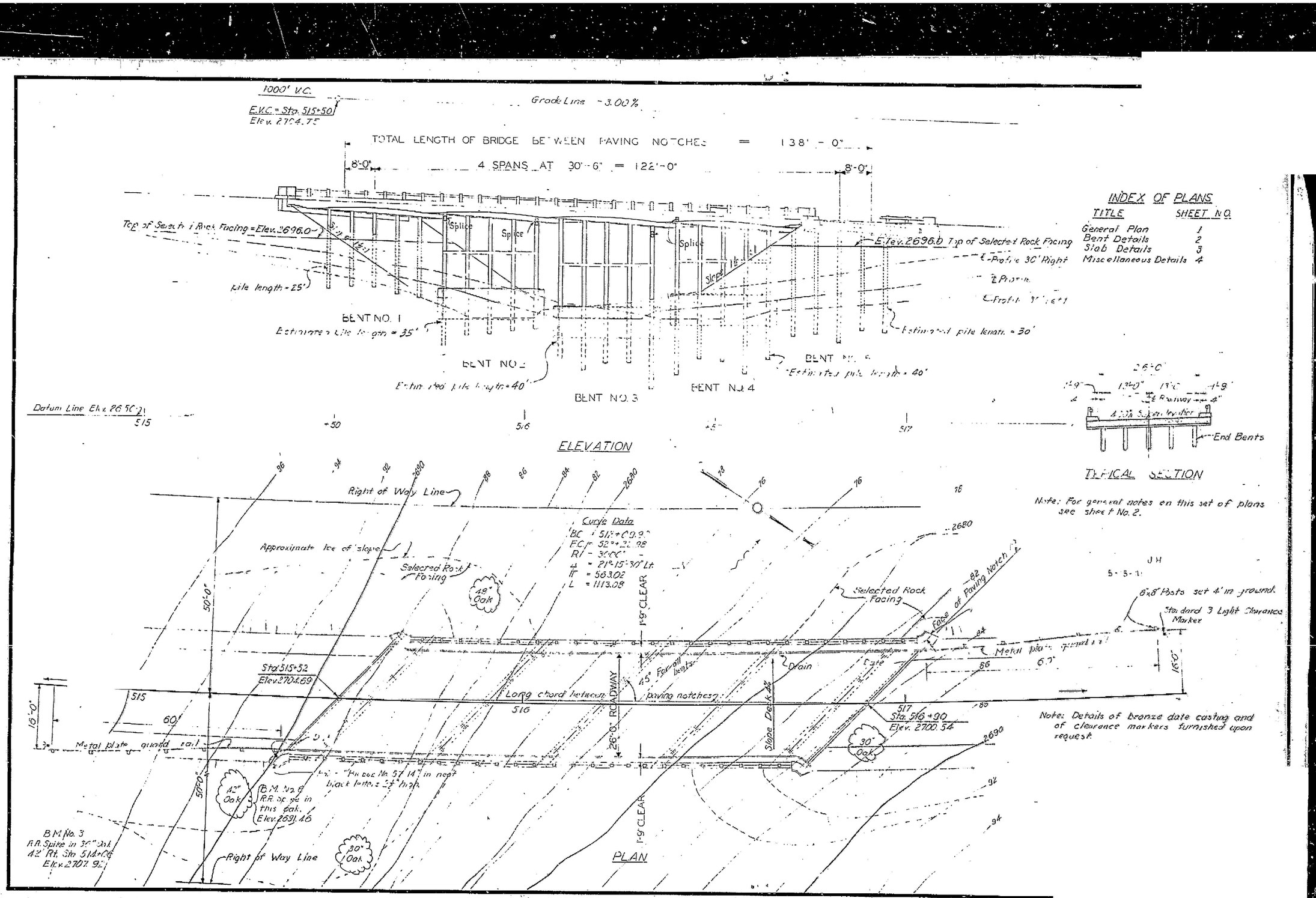

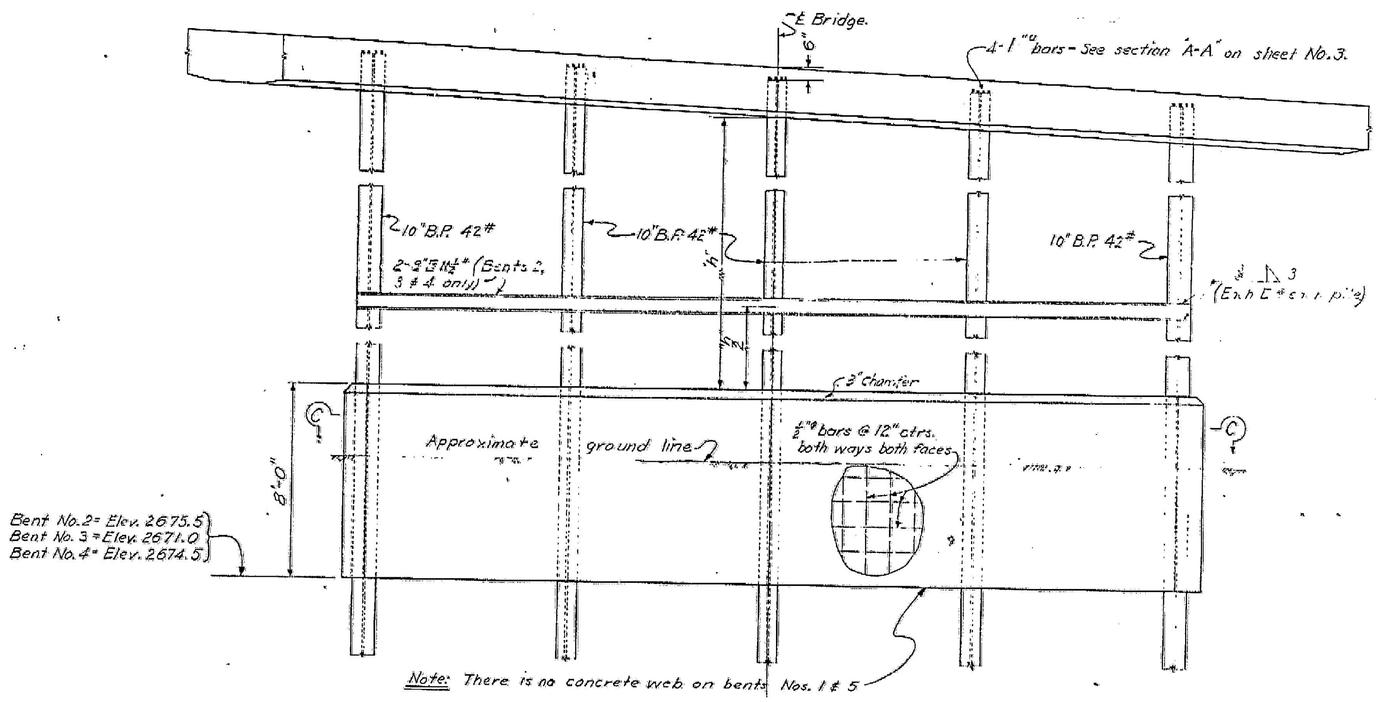

ELEVATION

GENERAL NOTES

All material and workmanship to conform to Standard Specifications of the Department of Public Works, Division of Highways, dated January, 1935 and to the Special Provisions accompanying this set of plans.

All concrete to be Class "A".

All reinforcing bars to be structural grade steel, deformed bars, embedded at least two diameters and lapped 40 diameters where spliced, unless otherwise noted.

Design Loading: H-15.

Design Stresses: $f_c = 1000\#/in.^2$; $f_s = 18000\#/in.^2$; $n = 10$.

10" Piles to be driven to a bearing of 40 Tons.

J.H.
5-15-41

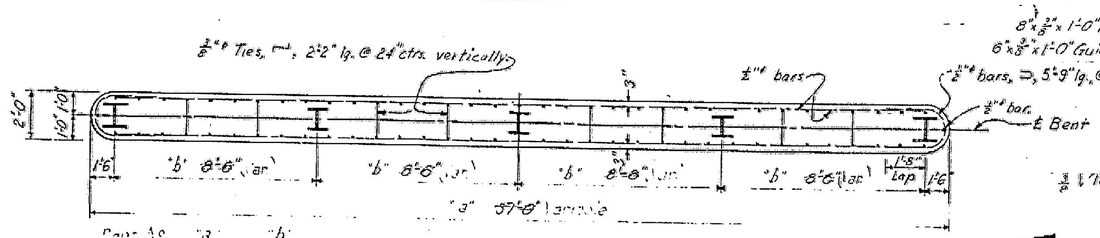

Bent No.	"a"	"b"
1	[illegible]	[illegible]
2	35'-66"	8'-5"
3	[illegible]	[illegible]
4	[illegible]	[illegible]
5	[illegible]	[illegible]

SECTION C-C

TYPICAL BENT

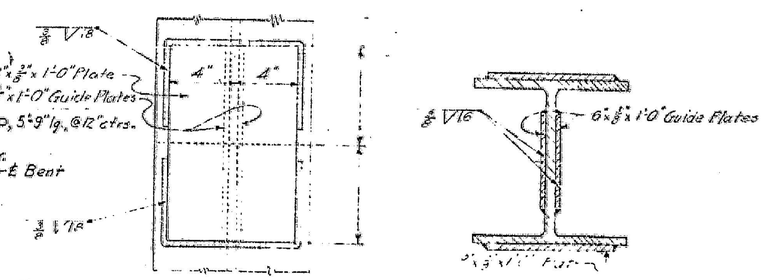

ELEVATION SECTION

TYPICAL PILE FIELD SPLICE

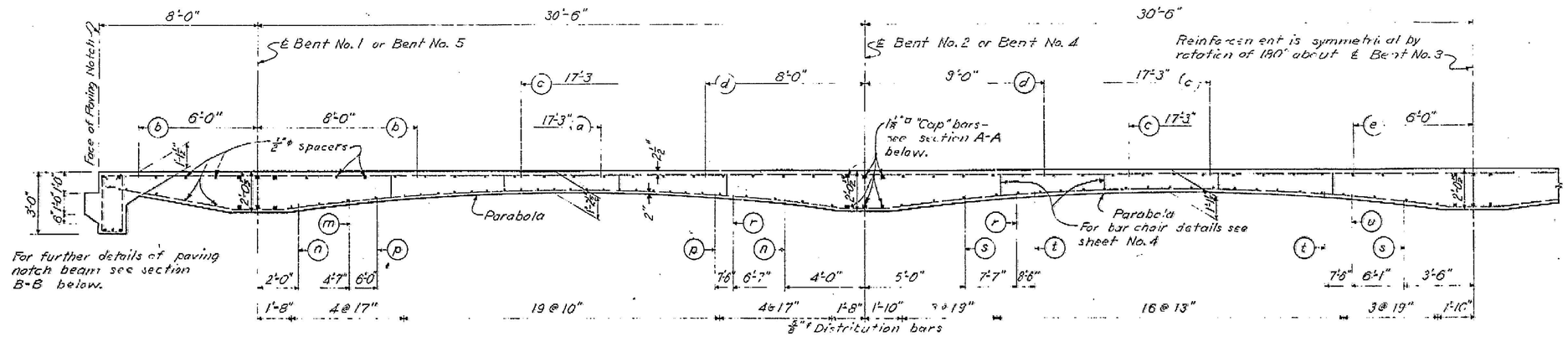

LONGITUDINAL SECTION
ON ℄ BRIDGE
(Developed)
(Steel piles not shown)

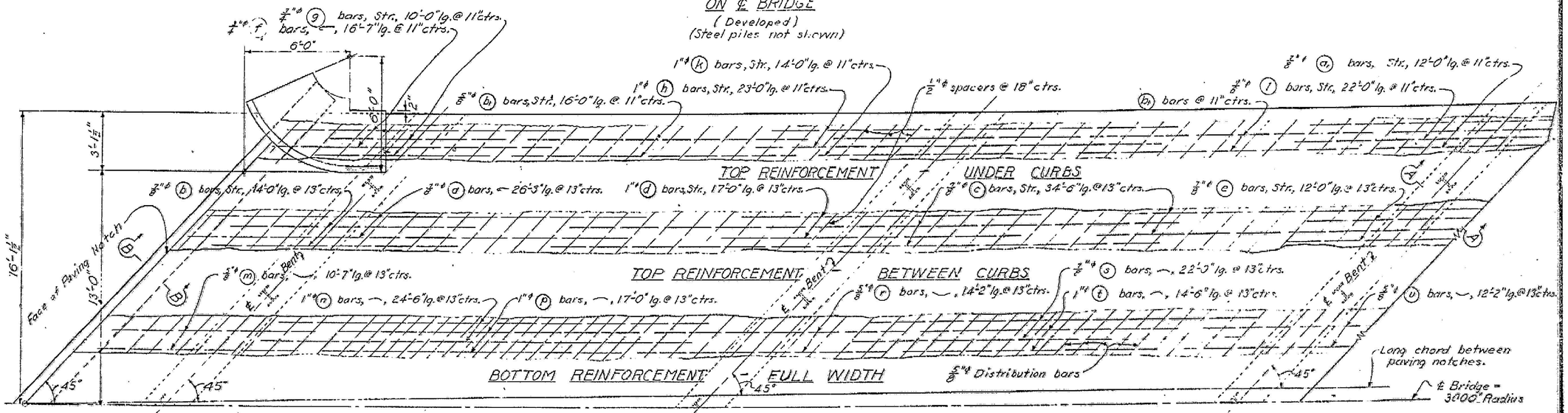

PLAN

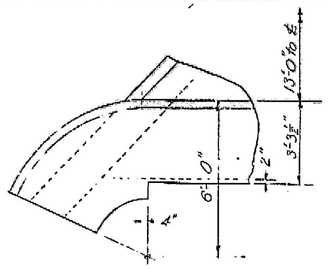

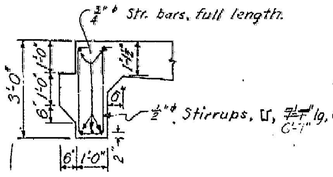

SECTION B-B

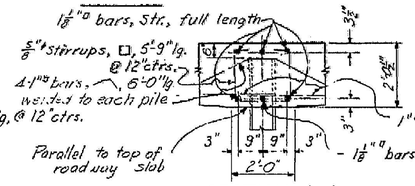

SECTION A-A

Note: (g), (h), (k), (l) and (a₁) bars under curbs are to be so placed that ℄ Bent bisects their length.

(b₁) bars under curbs are to be so placed that ℄ span bisects their length.

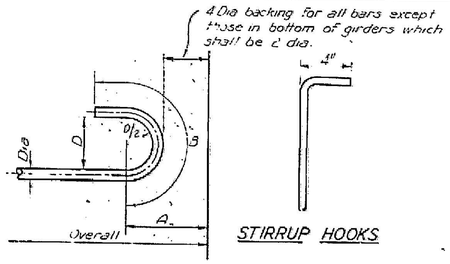

STIRRUP HOOKS

HOOKED BAR DATA							
4-DIA BACKING			ALL HOOKS		2-DIA BAR KINK		
Size of Bar	Overall ①	A	B	D	A	Overall ①	Size of Bar
1/2"	7 1/2"	7 1/2"	8"	3 1/2"	3 1/2"	9 1/2"	1/2"
5/8"	9 1/2"	9 1/2"	1'-0"	3 1/2"	3 1/2"	1'-2"	5/8"
3/4"	1'-1"	5 1/2"	1'-0"	3 1/2"	4"	1'-4"	3/4"
7/8"	2'-3"	7 1/2"	1'-9"	6"	5 1/2"	2'-3"	7/8"
1"	2'-0"	8"	1'-8"	6"	6"	2'-4"	1"
1 1/8"	2'-10"	9 1/2"	1'-8"	6"	6 1/2"	2'-9"	1 1/8"
1 1/4"	1'-9"	9 1/2"	1'-8"	6"	6 3/4"	2'-10"	1 1/4"

① Amount to be added to overall dimension of concrete member to give the length of the hooked reinforcing bars, hooked at each end.

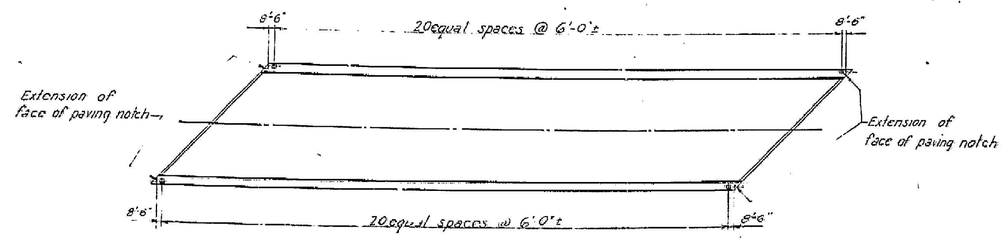

RAILING POST LAYOUT

No Scale

(Concrete end posts are not shown)

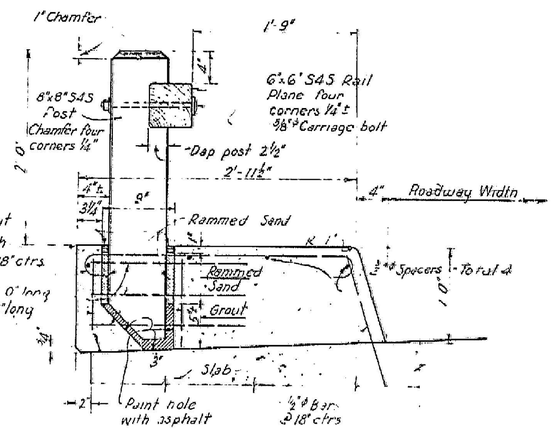

DETAIL FOR SUPERELEVATED ROADWAY

DETAILS - TIMBER RAIL WITH CONCRETE CURB

Scale 1 1/2" = 1'-0"

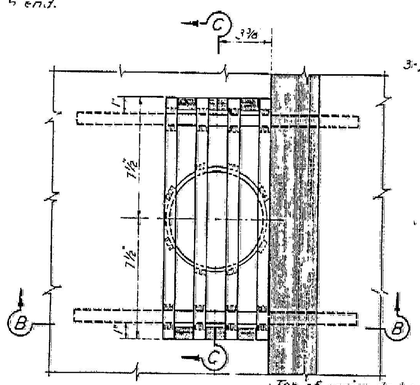

PLAN

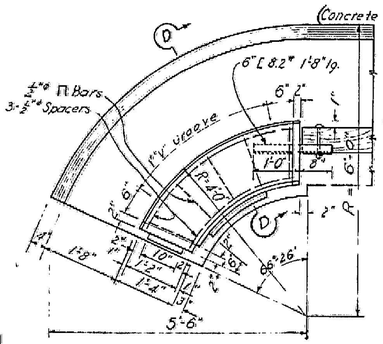

PLAN

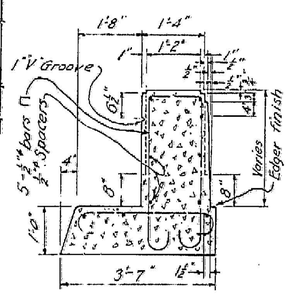

SECTION D-D

CONCRETE END POST

Scale: 3/4" = 1'-0"

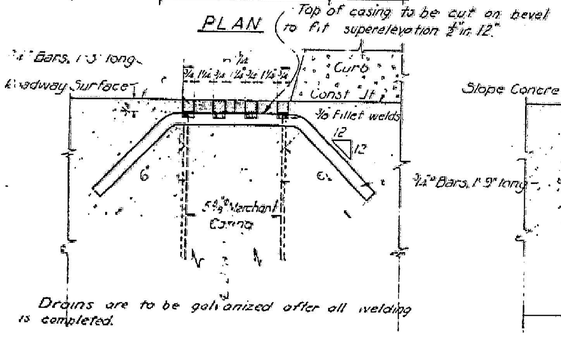

Drains are to be galvanized after all welding is completed.

SECTION B-B

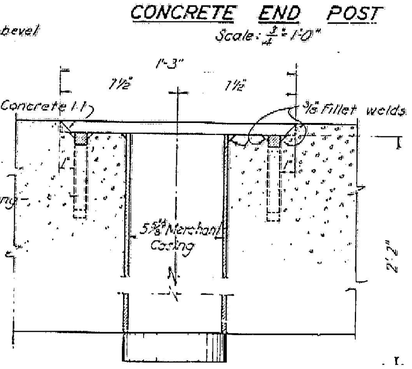

SECTION C-C

DRAIN DETAIL - TYPE "A"

3 Required

Scale 3" = 1'-0"

1-Galvanized drain as shown, with 12" length of 5 5/8" merchant casing, weighs 27.6#.
5 5/8" merchant casing - Galvanized - weighs 10.6# per foot.

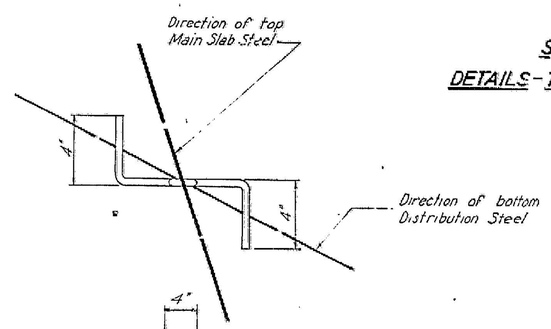

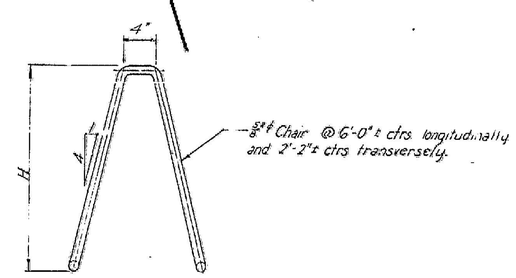

Contractor may submit to the Engineer for consideration and approval any alternative chair detail that he may desire to use.

SLAB REINFORCING BAR CHAIR

No Scale

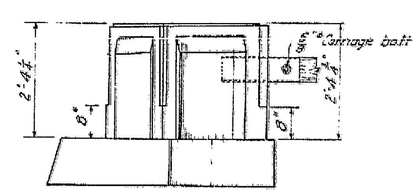

OUTSIDE ELEVATION

CONCRETE END POST

Scale: 3/4" = 1'-0"